High Rigidity Slider Type

Electric Actuator

CE UKCA RoHS
[Excludes the motorless type]

Supports 750 W (Motor output)

Work load*1 [kg]

Horizontal	Vertical
400	80

Speed*2 [mm/s]

Horizontal/Vertical
2300

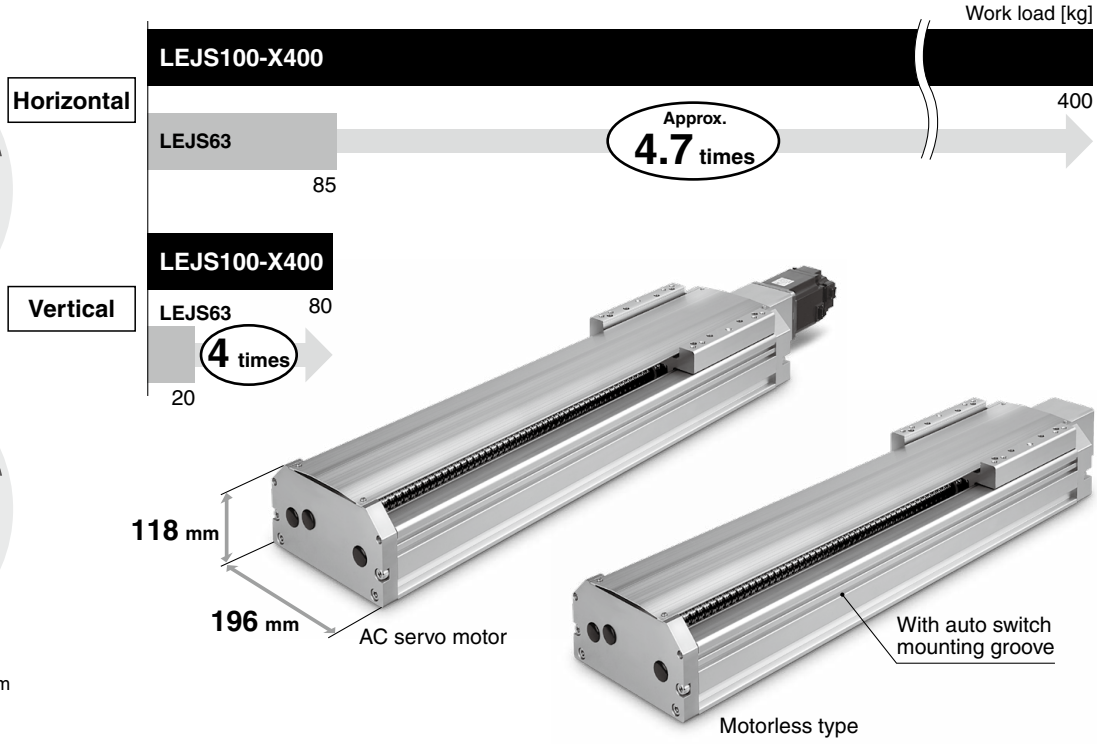

*1 Speed: 500 mm/s, Lead: 10 mm
*2 Stroke: 500 mm, Lead: 50 mm

Max. acceleration/deceleration: 10000 mm/s²

AC Servo Motor

For absolute encoder

Pulse input type/
Positioning type
LECSB-T Series

CC-Link
Direct input type
LECSC-T Series

SSCNETⅢ/H
type
LECSS-T Series

Motorless Type **Compatible Motors by Manufacturer**

Manufacturer	Series	Type	Battery-less absolute encoder	Compatible interfaces: Pulse input	CC-Link IE Field	CC-Link IE TSN	SSCNETⅢ/H	MECHATROLINK Ⅱ	MECHATROLINK Ⅲ	DeviceNet
Mitsubishi Electric Corporation	MELSERVO-J4	HG-KR73		●	●		●			
	MELSERVO-J5	HK-KT7M3W	●	●		●				
YASKAWA Electric Corporation	Σ-V	SGMJV-08		●				●	●	●
	Σ-7	SGM7J-08	●	●				●	●	●

Trademark: DeviceNet™ is a trademark of ODVA.

LEJS100-X400

SMC

LEJS100-X400

AC Servo Motor | Motorless Type

System Construction

Absolute encoder compatible *LECSB-T Series*
(Pulse input type/Positioning type)

Provided by the customer

Power supply
Single phase 200 to 240 VAC (50/60 Hz)
Three phase 200 to 240 VAC (50/60 Hz)

◎Option
Regeneration option Web Catalog
Part no.: **LEC-MR-RB-□**

Motor cable Web Catalog

Standard cable	Robotic cable
LE-CSM-S□□	LE-CSM-R□□

Lock cable Web Catalog

Standard cable	Robotic cable
LE-CSB-S□□	LE-CSB-R□□

Provided by the customer

Power supply for lock
24 VDC

Electric actuator
High rigidity slider type
LEJ Series

Encoder cable Web Catalog

Standard cable	Robotic cable
LE-CSE-S□□	LE-CSE-R□□

Main circuit power supply connector Web Catalog
(Accessory)

Control circuit power supply connector Web Catalog
(Accessory)

Motor connector Web Catalog
(Accessory)

Driver

Battery (Accessory) Web Catalog
Part no.: **(LEC-MR-BAT6V1SET)**

USB cable Web Catalog ◎Option
Part no.: **LEC-MR-J3USB**

Setup software Web Catalog
(MR Configurator2™)
Part no.: **LEC-MRC2□**

PC

Analog monitor output

RS-422 communication

◎Option
STO cable (3 m) Web Catalog
Part no.: **LEC-MR-D05UDL3M**

◎Option
I/O connector Web Catalog
Part no.: **LE-CSNB**
or
I/O cable Web Catalog
Part no.: **LEC-CSNB-1**

Provided by the customer

PLC (Positioning unit)
Power supply for I/O signal 24 VDC

∗ The LECSB2-T□ cannot be used with the LEC-MR-SETUP221□.

Absolute encoder compatible *LECSC-T Series*
(CC-Link direct input type)

Provided by the customer

Power supply
Single phase 200 to 230 VAC (50/60 Hz)
Three phase 200 to 230 VAC (50/60 Hz)

◎Option
Regeneration option Web Catalog
Part no.: **LEC-MR-RB-□**

Motor cable Web Catalog

Standard cable	Robotic cable
LE-CSM-S□□	LE-CSM-R□□

Lock cable Web Catalog

Standard cable	Robotic cable
LE-CSB-S□□	LE-CSB-R□□

Provided by the customer

Power supply for lock
24 VDC

Electric actuator
High rigidity slider type
LEJ Series

Encoder cable Web Catalog

Standard cable	Robotic cable
LE-CSE-S□□	LE-CSE-R□□

Main circuit power supply connector Web Catalog
(Accessory)

Control circuit power supply connector Web Catalog
(Accessory)

Motor connector Web Catalog
(Accessory)

Driver

Battery (Accessory) Web Catalog
Part no.: **(LEC-MR-J3BAT)**

USB cable Web Catalog ◎Option
Part no.: **LEC-MR-J3USB**

Setup software Web Catalog
(MR Configurator2™)
Part no.: **LEC-MRC2□**

PC

RS-422 communication

CC-Link connector∗1
(Accessory)

◎Option
I/O connector Web Catalog
Part no.: **LE-CSNA**
or
I/O cable Web Catalog
Part no.: **LEC-CSNA-1**

Provided by the customer

PLC (CC-Link master unit)
Power supply for I/O signal 24 VDC

∗ The LECSC2-T□ cannot be used with the LEC-MR-SETUP221□.

∗1 Product number: K05A50230600 manufactured by Mitsubishi Electric System & Service Co., Ltd.

System Construction

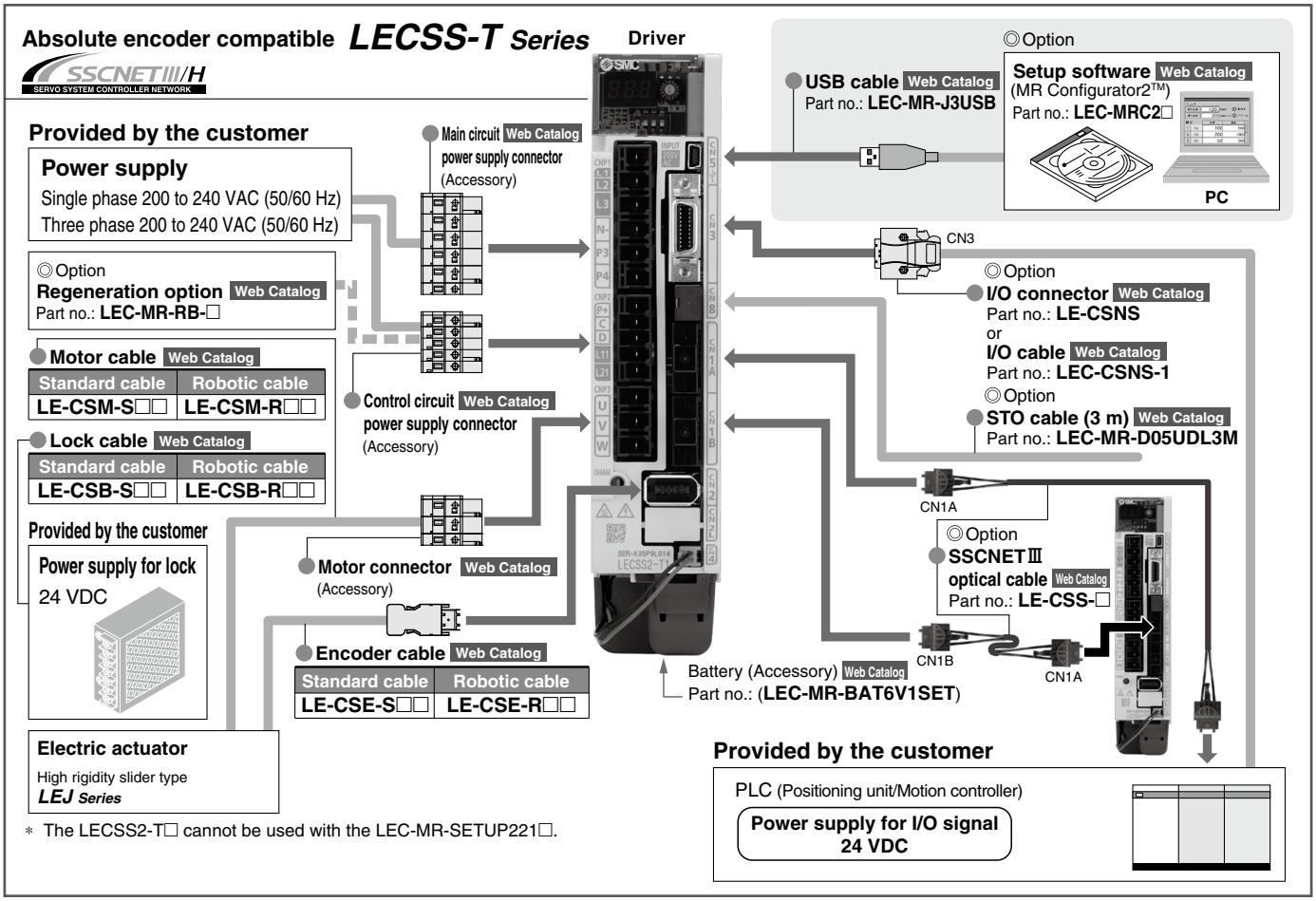

∗ The LECSS2-T□ cannot be used with the LEC-MR-SETUP221□.

Model Selection

Speed–Work Load Graph/Required Conditions for "Regeneration Option" (Guide)

AC Servo Motor

Horizontal

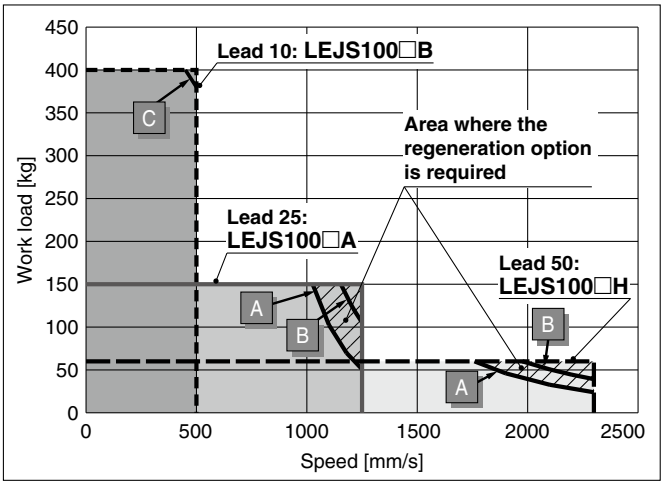

Vertical

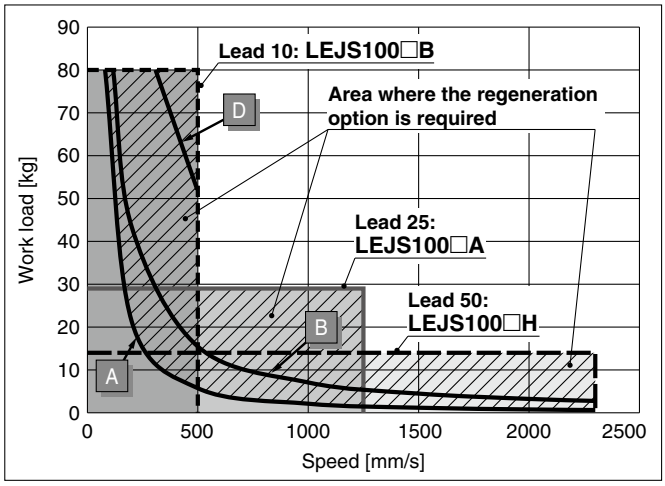

Required conditions for "Regeneration option"

∗ The regeneration option is required if the product is to be used in the "area beyond the regeneration line (A, B, C, or D)" in the graph. (Order separately.)

"Regeneration Option" Models

Operating condition	Regenerative condition Duty ratio	Regeneration option
A	100%	LEC-MR-RB-032
B		LEC-MR-RB-12
C	80%	
D	65%	

∗ Confirm the operating area, and order the regeneration option if needed.

Speed–Work Load Graph (Guide)

Motorless Type

Horizontal

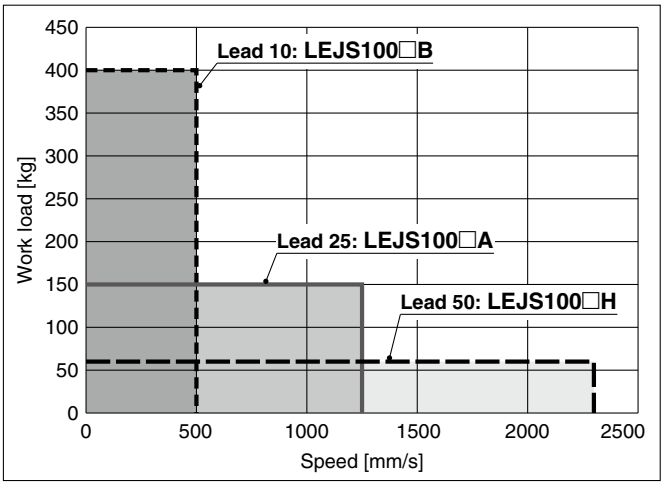

Vertical

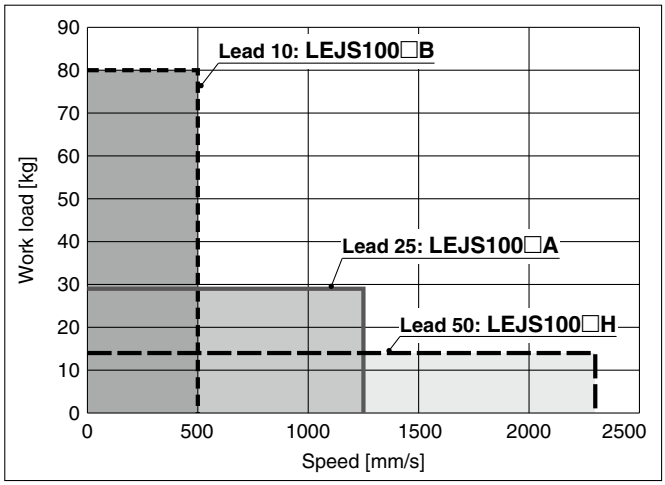

Static Allowable Moment∗1

[N·m]

Model	Size	Pitching	Yawing	Rolling
LEJS	**100**	805	771	939

∗1 The static allowable moment is the amount of static moment which can be applied to the actuator when it is stopped.
If the product is exposed to impact or repeated load, be sure to take adequate safety measures when using the product.

Dynamic Allowable Moment

∗ This graph shows the amount of allowable overhang (guide unit) when the center of gravity of the workpiece overhangs in one direction. When selecting the overhang, refer to "Calculation of Guide Load Factor" for confirmation.

Acceleration/Deceleration —— 1000 mm/s² - - - - 3000 mm/s² —— 5000 mm/s² ····· 9800 mm/s²

Load overhanging direction
m: Work load [kg]
Me: Dynamic allowable moment [N·m]
L: Overhang to the work load center of gravity [mm]

Horizontal

X

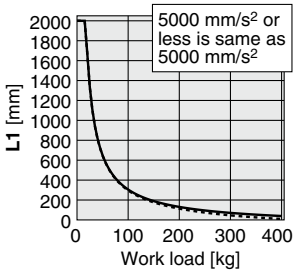

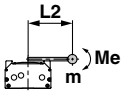

Y

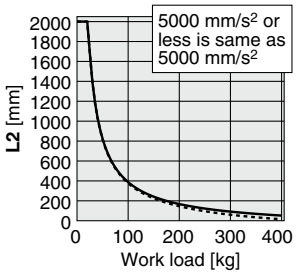

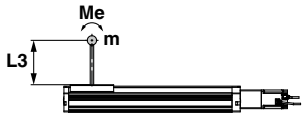

Z

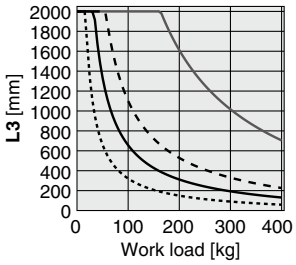

Bottom

X

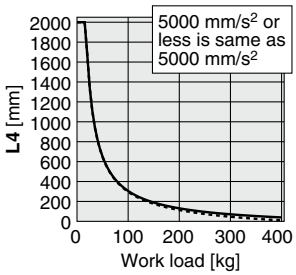

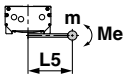

Y

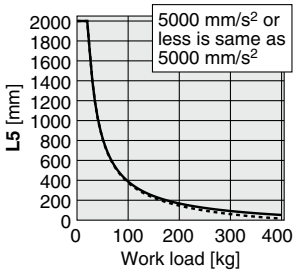

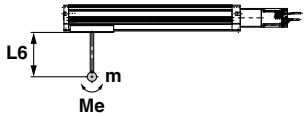

Z

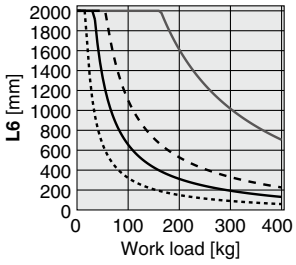

Wall

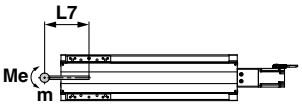

X

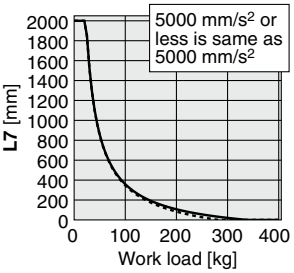

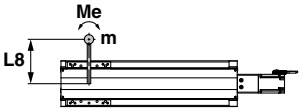

Y

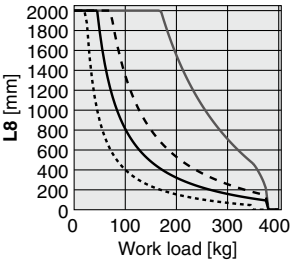

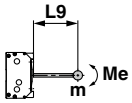

Z

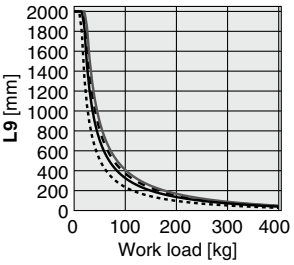

Vertical

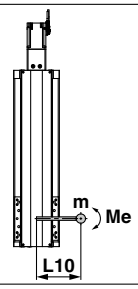

Y

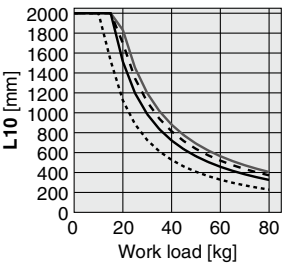

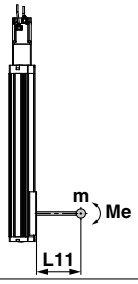

Z

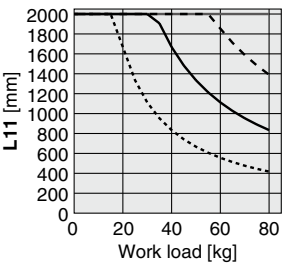

Calculation of Guide Load Factor

1. Decide operating conditions.
   Model: LEJS-X400
   Size: 100
   Mounting orientation: Horizontal/Bottom/Wall/Vertical
   Acceleration [mm/s^2]: **a**
   Work load [kg]: **m**
   Work load center position [mm]: **Xc/Yc/Zc**
2. Select the target graph with reference to the model, size, and mounting orientation.
3. Based on the acceleration and work load, obtain the overhang [mm]: **Lx/Ly/Lz** from the graph.
4. Calculate the load factor for each direction.
   $\alpha x = Xc/Lx \quad \alpha y = Yc/Ly \quad \alpha z = Zc/Lz$
5. Confirm the total of αx, αy, and αz is 1 or less.
   $\alpha x + \alpha y + \alpha z \leq 1$
   When 1 is exceeded, please consider a reduction of acceleration and work load, or a change of the work load center position and series.

Mounting orientation

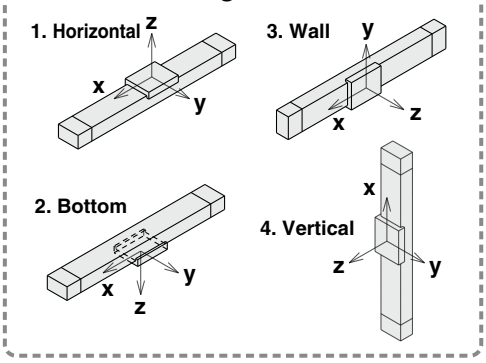

Example

1. Operating conditions
   Model: LEJS-X400
   Size: 100
   Mounting orientation: Horizontal
   Acceleration [mm/s^2]: 5000
   Work load [kg]: 100
   Work load center position [mm]: **Xc = 50**, **Yc = 100**, **Zc = 200**
2. Select the graph on page 3, top and left side first row.
3. **Lx = 300 mm**, **Ly = 380 mm**, **Lz = 650 mm**
4. The load factor for each direction can be obtained as follows.
   $\alpha x = 50/300 = 0.17$
   $\alpha y = 100/380 = 0.26$
   $\alpha z = 200/650 = 0.31$
5. $\alpha x + \alpha y + \alpha z = 0.74 \leq 1$

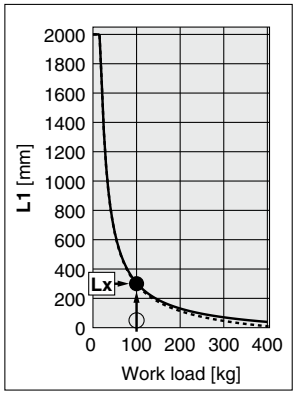

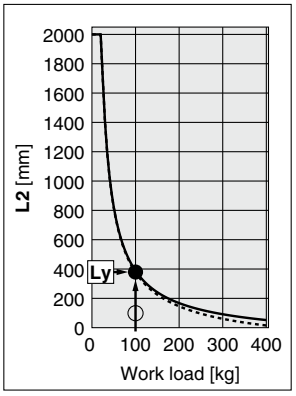

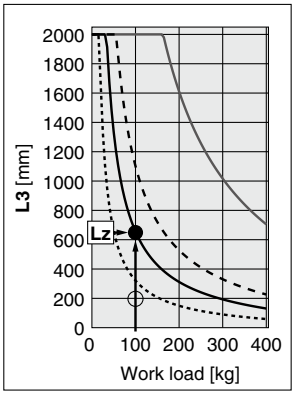

Electric Actuator/High Rigidity Slider Type Ball Screw Drive

LEJS100-X400

How to Order

LEJS100 T9 B – 500 □ T – □ □ □ □ – X400

❶ ❷ ❸ ❹ ❺ ❻ ❼

- **T9**: Motor type: AC servo motor (Absolute encoder) 750 W
- **T**: With top cover type

❶ Lead [mm]

H	50
A	25
B	10

❷ Stroke [mm]

200	200	**800**	800
300	300	**1000**	1000
400	400	**1200**	1200
500	500	**1500**	1500
600	600		

❸ Motor option

Nil	Without option
B	With lock

❹ Cable type*1*2

Nil	Without cable
S	Standard cable
R	Robotic cable (Flexible cable)

*1 When a driver type is selected, a cable is included. Select the cable type and cable length.
Example)
S2B2: Standard cable (2 m) + Driver (LECSB2)
S2 : Standard cable (2 m)
Nil : Without cable and driver

*2 The motor and encoder cables are included. (The lock cable is included when the motor with lock option is selected.)

❺ Cable length [m]*3

Nil	Without cable
2	2
5	5
A	10

*3 The length of the motor, encoder, and lock cables are the same.

❻ Driver type*1

	Compatible driver Model	Power supply voltage [V]	Control method
Nil	Without driver	—	—
B2	LECSB2-T9	200 to 240	Pulse input/Point table
C2	LECSC2-T□	200 to 230	CC-Link
S2	LECSS2-T□	200 to 240	SSCNETⅢ/H

❼ I/O cable length [m]*4

Nil	Without cable
H	Connector only
1	1.5

*4 When "Without driver" is selected for driver type, only "Nil: Without cable" can be selected.

Compatible Driver

Driver type	Pulse input type/ Positioning type 	CC-Link direct input type 	SSCNETⅢ/H type 
Series	**LECSB-T**	**LECSC-T**	**LECSS-T**
Number of point tables	Up to 255	Up to 255 (2 stations occupied)	—
Pulse input	○	—	—
Applicable network	—	CC-Link	SSCNETⅢ/H
Control encoder	Absolute 22-bit encoder	Absolute 18-bit encoder	Absolute 22-bit encoder
Communication function	USB communication, RS422 communication	USB communication, RS422 communication	USB communication
Power supply voltage [V]	200 to 240 VAC (50/60 Hz)	200 to 230 VAC (50/60 Hz)	200 to 240 VAC (50/60 Hz)

Specifications

Actuator specifications	Stroke [mm]*1			200, 300, 400, 500, 600, 800, 1000, 1200, 1500		
	Lead [mm]			50	25	10
	Work load*2 [kg]	Horizontal	3000 (mm/s²)	60	150	400
			5000 (mm/s²)	43	93	150
			9800 (mm/s²)	22	36	—
		Vertical	3000 (mm/s²)	14	29	80
			5000 (mm/s²)	12	29	30
			9800 (mm/s²)	8	9	—
	Max. speed*3 [mm/s]	Stroke range	200 to 800	2300	1250	500
			1000	1600	800	320
			1200	1200	600	240
			1500	900	450	180
	Max. acceleration/deceleration [mm/s²]			9800		
	Positioning repeatability [mm]			±0.01		
	Lost motion [mm]*4			0.05 or less		
	Impact/Vibration resistance [m/s²]*5			50/20		
	Actuation type			Ball screw		
	Guide type			Linear guide		
	Static allowable moment*6 [N·m]	Mep (Pitching)		805		
		Mey (Yawing)		771		
		Mer (Rolling)		939		
	Operating temperature range [°C]			5 to 40		
	Operating humidity range [%RH]			90 or less (No condensation)		
	Regeneration option			May be required depending on speed and work load. (Refer to page 2.)		
Electric specifications	Motor output [W]/Size [mm]			750/□80		
	Motor type			AC servo motor (200 VAC)		
	Encoder			Absolute 22-bit encoder (Resolution: 4194304 p/rev)		
	Power [W]*7			Max. power 1100		
Lock unit specifications	Type*8			Non-magnetizing lock		
	Holding force [N]			240	480	1200
	Power consumption [W] at 20°C			10		
	Rated voltage [V]			24 VDC$^{0}_{-10\%}$		

*1 Strokes other than those listed in the table above are available as special orders. Please contact SMC for further details.
*2 For details, refer to "Speed–Work Load Graph (Guide)" on page 2.
*3 The allowable speed changes according to the stroke.
*4 A reference value for correcting an error in reciprocal operation
*5 Impact resistance: No malfunction occurred when the actuator was tested with a drop tester in both an axial direction and a perpendicular direction to the lead screw. (The test was performed with the actuator in the initial state.)
Vibration resistance: No malfunction occurred in a test ranging between 45 to 2000 Hz. The test was performed in both an axial direction and a perpendicular direction to the lead screw. (The test was performed with the actuator in the initial state.)
*6 The static allowable moment is the amount of static moment which can be applied to the actuator when it is stopped.
If the product is exposed to impact or repeated load, be sure to take adequate safety measures when using the product.
*7 Indicates the max. power during operation (including the driver)
When selecting the power supply capacity, refer to the power supply capacity in the operation manual of each driver.
*8 Only when motor option "With lock" is selected
* Do not allow collisions at either end of the table traveling distance. Additionally, when running the positioning operation, do not set within 7 mm of both ends.

Construction

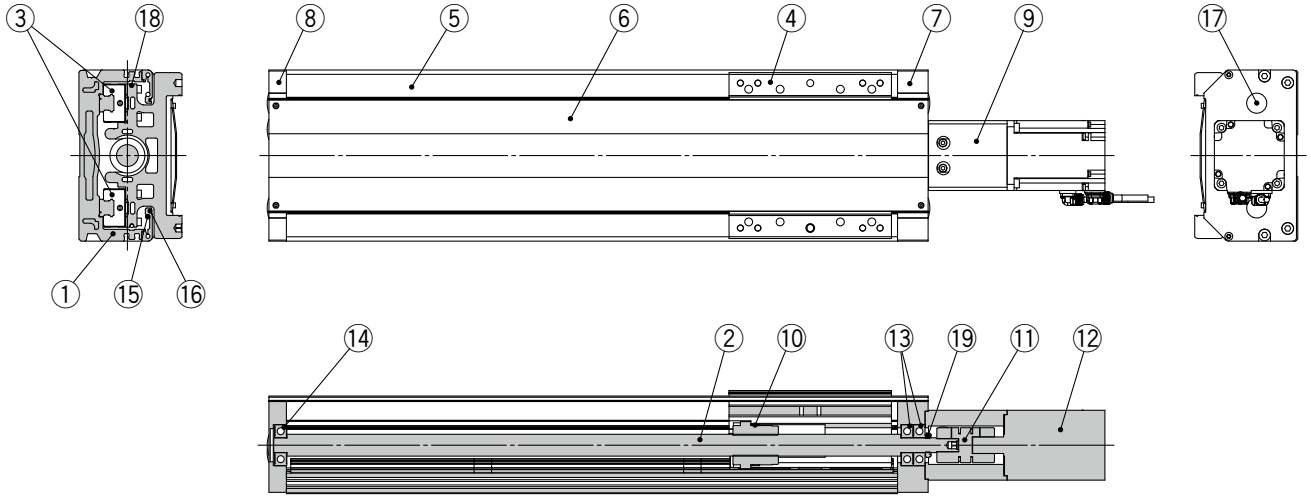

Component Parts

No.	Description	Material	Note
1	**Body**	Aluminum alloy	Anodized
2	**Ball screw assembly**	—	
3	**Linear guide assembly**	—	
4	**Table**	Aluminum alloy	Anodized
5	**Side cover**	Aluminum alloy	Anodized
6	**Dust cover**	Aluminum alloy	Anodized
7	**Plate M**	Aluminum alloy	Anodized
8	**Plate E**	Aluminum alloy	Anodized
9	**Motor block**	Aluminum alloy	Anodized
10	**Spacer**	Aluminum alloy	“Lead: H” only
11	**Coupling**	—	
12	**Motor**	—	
13	**Bearing**	—	
14	**Bearing**	—	
15	**Pin**	Carbon steel	
16	**Pin**	Carbon steel	
17	**Cap**	Polyethylene	
18	**Magnet**	—	
19	**Lock nut**	—	

Replacement Parts/Grease Pack

Applied portion	Order no.
Ball screw	GR-S-010 (10 g)
Linear guide portion	GR-S-020 (20 g)

Dimensions: Ball Screw Drive

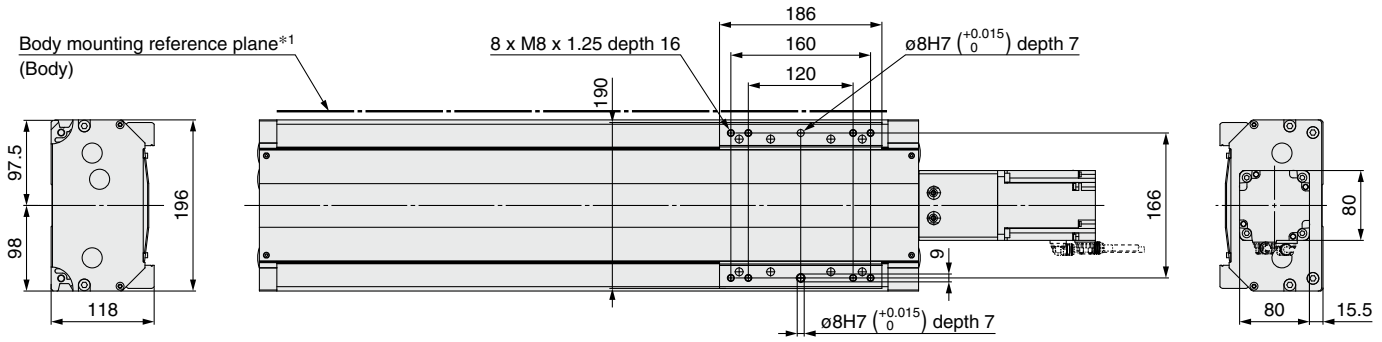

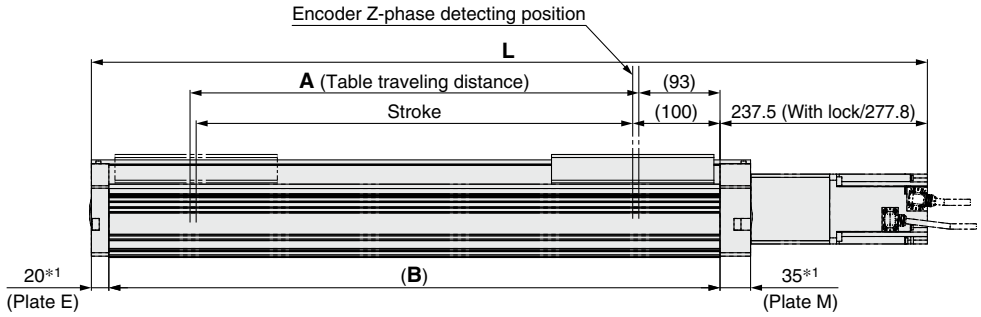

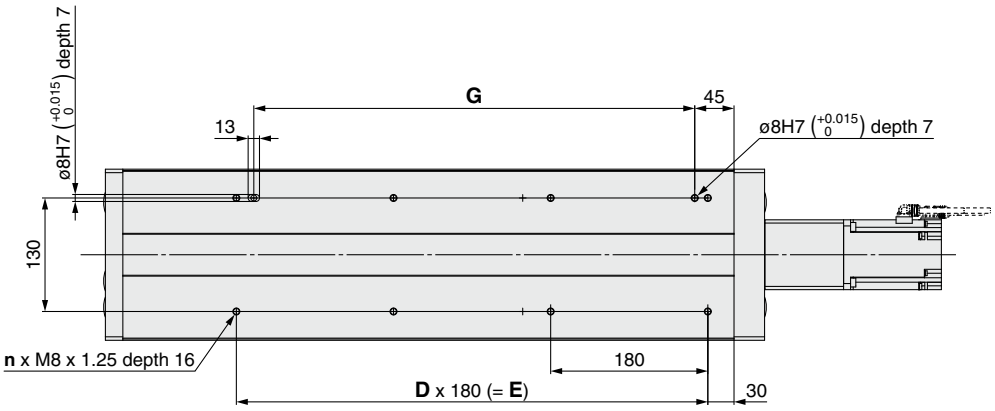

*1 When mounting the actuator using the body mounting reference plane, set the height of the opposite surface or pin to be 5 mm or more. (Recommended height 6 mm)
The surfaces of plates M and E on the ends of the product may slightly protrude from the body mounting reference plane (Body/B dimension range). Be sure to provide a clearance of 1 mm or more to avoid interference.

* Please consult with SMC for adjusting the Z-phase detecting position at the stroke end of the end side.

Dimensions and Weight

Stroke	L		A	B	n	D	E	G	Weight [kg]	
	Without lock	With lock							Without lock	With lock
200	657.5	697.8	214	400	6	2	360	325	20.4	21.4
300	757.5	797.8	314	500	6	2	360	325	22.5	23.5
400	857.5	897.8	414	600	8	3	540	505	24.6	25.6
500	957.5	997.8	514	700	8	3	540	505	26.7	27.7
600	1057.5	1097.8	614	800	10	4	720	685	28.8	29.8
800	1257.5	1297.8	814	1000	12	5	900	865	33.0	34.0
1000	1457.5	1497.8	1014	1200	14	6	1080	1045	37.1	38.1
1200	1657.5	1697.8	1214	1400	16	7	1260	1225	41.3	42.3
1500	1957.5	1997.8	1514	1700	20	9	1620	1585	47.6	48.6

AC Servo Motor Driver

Absolute Type

LECSB-T **(Pulse input type/Positioning type)**
LECSC-T **(CC-Link direct input type)** ***/LECSS-T*** **(SSCNETⅢ/H type)** ***Series***

How to Order

LECSB-T LECSC-T LECSS-T

LECS B 2 – T9

Driver type

B	Pulse input type/Positioning type (For absolute encoder)
C	CC-Link direct input type (For absolute encoder)
S	SSCNET Ⅲ/H type (For absolute encoder)

Power supply voltage

2	200 to 240 VAC, 50/60 Hz (For LECSB2-T/LECSS2-T)
	200 to 230 VAC, 50/60 Hz (For LECSC2-T)

∗ If an I/O connector is required, order the part number "LE-CSN□" separately.
∗ If an I/O cable is required, order the part number "LEC-CSN□-1" separately.
(Since the electric actuator will not operate without forced stop (EM2) wiring when using the LECSB-T in any mode other than positioning mode, an I/O connector or an I/O cable is required.)

Compatible motor type

Symbol	Type	Capacity	Encoder
T9	AC servo motor (T9∗1)	750 W	Absolute

∗1 The symbol shows the motor type (actuator).

Dimensions

LECSB2-T9

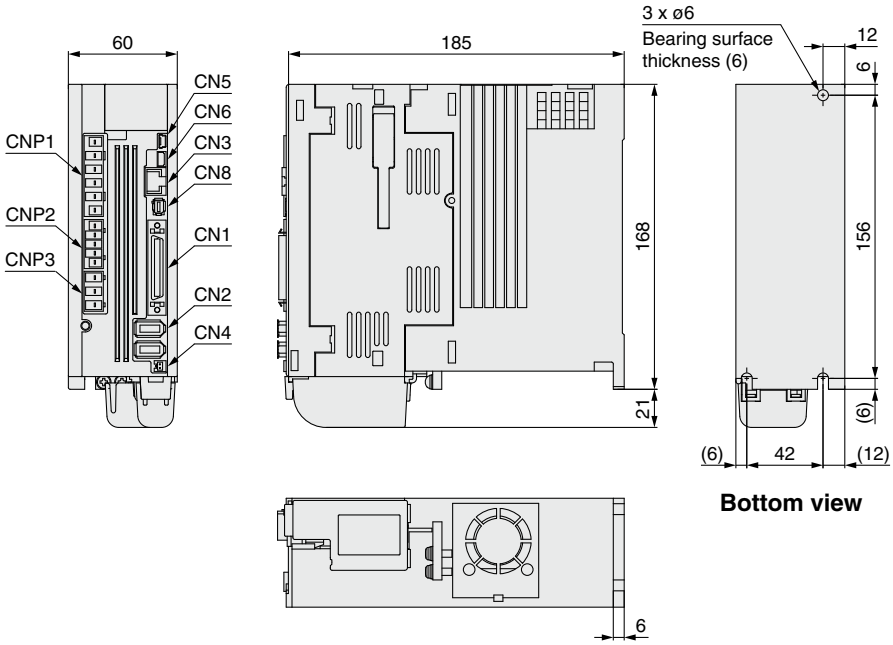

Connector

Connector name	Description
CN1	I/O signal connector
CN2	Encoder connector
CN3	RS-422 communication connector
CN4	Battery connector
CN5	USB communication connector
CN6	Analog monitor connector
CN8	STO input signal connector
CNP1	Main circuit power supply connector
CNP2	Control circuit power supply connector
CNP3	Servo motor power connector

LECSC2-T9

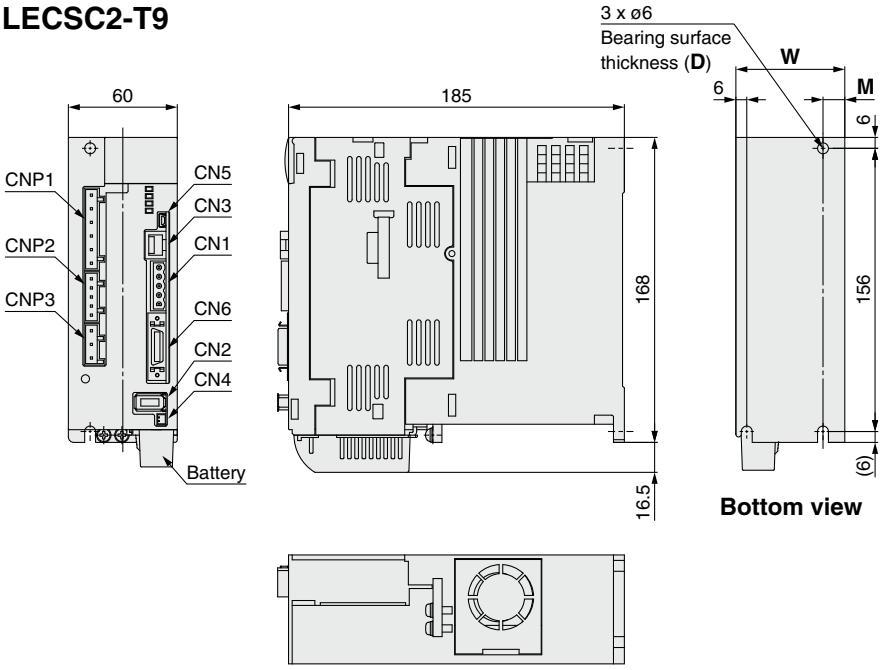

Connector

Connector name	Description
CN1	CC-Link connector
CN2	Encoder connector
CN3	RS-422 communication connector
CN4	Battery connector
CN5	USB communication connector
CN6	I/O signal connector
CNP1	Main circuit power supply connector
CNP2	Control circuit power supply connector
CNP3	Servo motor power connector

Dimensions

LECSS2-T9

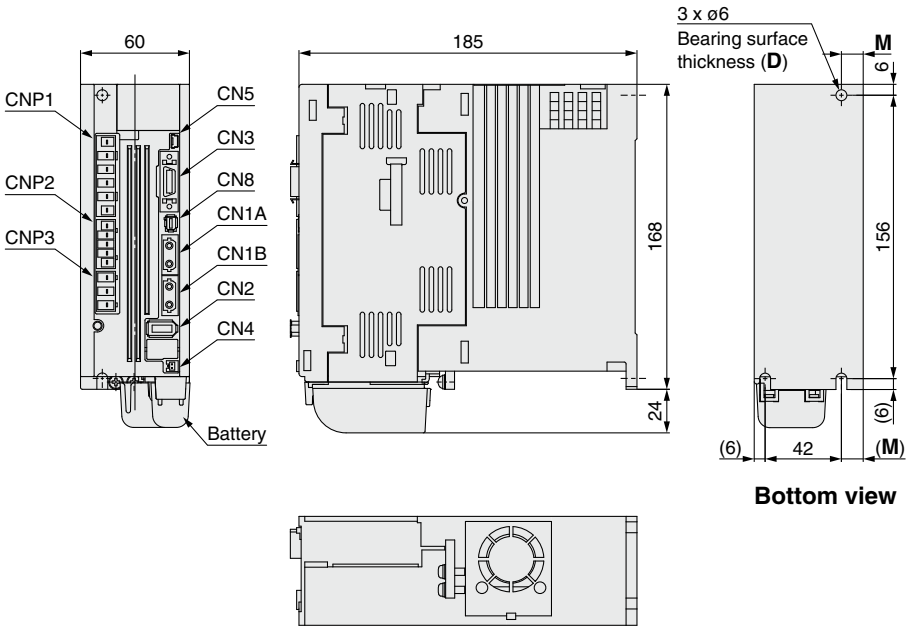

Connector

Connector name	Description
CN1A	Front axis connector for SSCNET Ⅲ/H
CN1B	Rear axis connector for SSCNET Ⅲ/H
CN2	Encoder connector
CN3	I/O signal connector
CN4	Battery connector
CN5	USB communication connector
CN8	STO input signal connector
CNP1	Main circuit power supply connector
CNP2	Control circuit power supply connector
CNP3	Servo motor power connector

Specifications

Model		LECSB2-T9
Compatible motor capacity [W]		750
Compatible encoder		Absolute 22-bit encoder (Resolution: 4194304 p/rev)
Main power supply	Power voltage [V]	Three phase 200 to 240 VAC (50/60 Hz), Single phase 200 to 240 VAC (50/60 Hz)
	Allowable voltage fluctuation [V]	Three phase 170 to 264 VAC (50/60 Hz), Single phase 170 to 264 VAC (50/60 Hz)
	Rated current [A]	3.8
Control power supply	Control power supply voltage [V]	Single phase 200 to 240 VAC (50/60 Hz)
	Allowable voltage fluctuation [V]	Single phase 170 to 264 VAC
	Rated current [A]	0.2
Parallel input		10 inputs
Parallel output		6 outputs
Max. input pulse frequency [pps]		4 M (for differential receiver), 200 k (for open collector)
Function	In-position range setting [pulse]	0 to ±65535 (Command pulse unit)
	Error excessive	±3 rotations
	Torque limit	Parameter setting or external analog input setting (0 to 10 VDC)
	Communication	USB communication, RS422 communication*1
	Point table	Up to 255 points
	Pushing operation	Point table no. input method, Up to 127 points
Operating temperature range [°C]		0 to 55 (No freezing)
Operating humidity range [%RH]		90 or less (No condensation)
Storage temperature range [°C]		–20 to 65 (No freezing)
Storage humidity range [%RH]		90 or less (No condensation)
Insulation resistance [MΩ]		Between the housing and SG: 10 (500 VDC)
Safety function		STO (IEC/EN 61800-5-2)
Safety standards*2		EN ISO 13849-1 Category 3 PL e, IEC 61508 SIL 3, EN 62061 SIL CL3, EN 61800-5-2
Weight [g]		1400

*1 USB communication and RS422 communication cannot be performed at the same time.
*2 The safety level depends on the set value of the driver parameter [Pr. PF18 STO diagnosis error detection time] and whether STO input diagnosis by TOFB output is performed or not. Refer to the LECSB-T operation manual for details.

LECSC-T Series

Model			LECSC2-T9
Compatible motor capacity [W]			750
Compatible encoder			Absolute 18-bit encoder (Resolution: 262144 p/rev)
Main power supply	Power voltage [V]		Three phase 200 to 230 VAC (50/60 Hz), Single phase 200 to 230 VAC (50/60 Hz)
	Allowable voltage fluctuation [V]		Three phase 170 to 253 VAC, Single phase 170 to 253 VAC
	Rated current [A]		3.8
Control power supply	Control power supply voltage [V]		Single phase 200 to 230 VAC (50/60 Hz)
	Allowable voltage fluctuation [V]		Single phase 170 to 253 VAC
	Rated current [A]		0.2
Communication specifications	Applicable Fieldbus protocol (Version)		CC-Link communication (Ver. 1.10)
	Connection cable		CC-Link Ver. 1.10 compliant cable (Shielded 3-core twisted pair cable)*1
	Remote station number		1 to 64
	Cable length	Communication speed [bps]/ Maximum overall cable length [m]	16 k/1200, 625 k/900, 2.5 M/400, 5 M/160, 10 M/100
		Cable length between stations [m]	0.2 or more
	I/O occupation area (Inputs/Outputs)		1 station occupied (Remote I/O 32 points/32 points)/(Remote register 4 words/4 words) 2 stations occupied (Remote I/O 64 points/64 points)/(Remote register 8 words/8 words)
	Number of connectable drivers		Up to 42 (when 1 station is occupied by 1 driver), Up to 32 (when 2 stations are occupied by 1 driver), when there are only remote device stations.
Command method	Remote register input		Available with CC-Link communication (2 stations occupied)
	Point table No. input		Available with CC-Link communication, RS422 communication CC-Link communication (1 station occupied): 31 points, CC-Link communication (2 stations occupied): 255 points RS422 communication: 255 points
	Indexer positioning input		Available with CC-Link communication CC-Link communication (1 station occupied): 31 points, CC-Link communication (2 stations occupied): 255 points
Communication function			USB communication, RS-422 communication*2
Operating temperature range [°C]			0 to 55 (No freezing)
Operating humidity range [%RH]			90 or less (No condensation)
Storage temperature range [°C]			–20 to 65 (No freezing)
Storage humidity range [%RH]			90 or less (No condensation)
Insulation resistance [MΩ]			Between the housing and SG: 10 (500 VDC)
Weight [g]			1400

*1 If the system comprises of both CC-Link Ver. 1.00 and Ver. 1.10 compliant cables, Ver. 1.00 specifications are applied to the overall cable length and the cable length between stations.
*2 USB communication and RS422 communication cannot be performed at the same time.

Specifications

LECSS-T Series

Model		LECSS2-T9
Compatible motor capacity [W]		750
Compatible encoder		Absolute 22-bit encoder (Resolution: 4194304 p/rev)
Main power supply	**Power voltage [V]**	Three phase 200 to 240 VAC (50/60 Hz), Single phase 200 to 240 VAC (50/60 Hz)
	Allowable voltage fluctuation [V]	Three phase 170 to 264 VAC (50/60 Hz), Single phase 170 to 264 VAC (50/60 Hz)
	Rated current [A]	3.8
Control power supply	**Control power supply voltage [V]**	Single phase 200 to 240 VAC (50/60 Hz)
	Allowable voltage fluctuation [V]	Single phase 170 to 264 VAC
	Rated current [A]	0.2
Applicable Fieldbus protocol		SSCNET Ⅲ/H (High-speed optical communication)
Communication function		USB communication
Operating temperature range [°C]		0 to 55 (No freezing)
Operating humidity range [%RH]		90 or less (No condensation)
Storage temperature range [°C]		–20 to 65 (No freezing)
Storage humidity range [%RH]		90 or less (No condensation)
Insulation resistance [MΩ]		Between the housing and SG: 10 (500 VDC)
Safety function		STO (IEC/EN 61800-5-2)
Safety standards∗1		EN ISO 13849-1 Category 3 PL d, EN 61508 SIL 2, EN 62061 SIL CL2, EN 61800-5-2
Weight [g]		1400

∗1 Refer to the LECSS-T operation manual for details.

Motorless Type

Electric Actuator/High Rigidity Slider Type Ball Screw Drive

LEJS100-X400

RoHS

How to Order

LEJS100 N B – 500 T – X400

Motorless type ❶ ❷ With top cover type

❶ Lead [mm]

H	50
A	25
B	10

❷ Stroke [mm]

200	200
300	300
400	400
500	500
600	600
800	800
1000	1000
1200	1200
1500	1500

Specifications

Actuator specifications	**Stroke*1 [mm]**			200, 300, 400, 500, 600, 800, 1000, 1200, 1500		
	Lead [mm]			50	25	10
	Work load*2 [kg]	Horizontal	3000 [mm/s²]	60	150	400
			5000 [mm/s²]	43	93	150
			9800 [mm/s²]	22	36	—
		Vertical	3000 [mm/s²]	14	29	80
			5000 [mm/s²]	12	29	30
			9800 [mm/s²]	8	9	—
	Max. speed*3 [mm/s]	Stroke range	200 to 800	2300	1250	500
			1000	1600	800	320
			1200	1200	600	240
			1500	900	450	180
	Max. acceleration/deceleration [mm/s²]			9800		
	Positioning repeatability [mm]			±0.01		
	Lost motion*4 [mm]			0.05 or less		
	Ball screw specifications	Thread size [mm]		ø25		
		Shaft length [mm]		Stroke + 284.5		
	Impact/Vibration resistance*5 [m/s²]			50/20		
	Actuation type			Ball screw		
	Guide type			Linear guide		
	Static allowable moment*6 [N·m]	Mep (Pitching)		805		
		Mey (Yawing)		771		
		Mer (Rolling)		939		
	Operating temperature range [°C]			5 to 40		
	Operating humidity range [%RH]			90 or less (No condensation)		
Other*7 specifications	**Actuation unit weight [kg]**			4.58		
	Other inertia [kg·cm²]			0.43		
	Friction coefficient			0.05		
	Mechanical efficiency			0.8		
Reference motor specifications	**Motor type**			AC servo motor (200 VAC)		
	Rated output capacity [W]			750		
	Rated torque [N·m]			2.4		
	Rated rotation [rpm]			3000		

*1 Strokes other than those listed in the table above are available as special orders. Please contact SMC for further details.
*2 For details, refer to "Speed–Work Load Graph (Guide)" on page 2.
*3 The allowable speed changes according to the stroke.
*4 A reference value for correcting an error in reciprocal operation
*5 Impact resistance: No malfunction occurred when the actuator was tested with a drop tester in both an axial direction and a perpendicular direction to the lead screw. (The test was performed with the actuator in the initial state.)
Vibration resistance: No malfunction occurred in a test ranging between 45 to 2000 Hz. The test was performed in both an axial direction and a perpendicular direction to the lead screw. (The test was performed with the actuator in the initial state.)
*6 The static allowable moment is the amount of static moment which can be applied to the actuator when it is stopped.
If the product is exposed to impact or repeated load, be sure to take adequate safety measures when using the product.
*7 Each value is only to be used as a guide to select a motor of the appropriate capacity.
* Values in this specifications table are the allowable values of the actuator body with the standard motor mounted. Do not use the actuator so that it exceeds these values.
* Before mounting the coupling, remove any dust, oil, etc., adhered to the shaft and the inner surface of the coupling.
* This product does not come with a motor, motor mounting screws, or couplings. They should be prepared separately by the customer.
* Take measures to prevent the loosening of the motor mounting screws.
* Do not allow collisions at either end of the table traveling distance. Additionally, when running the positioning operation, do not set within 7 mm of both ends.

Dimensions

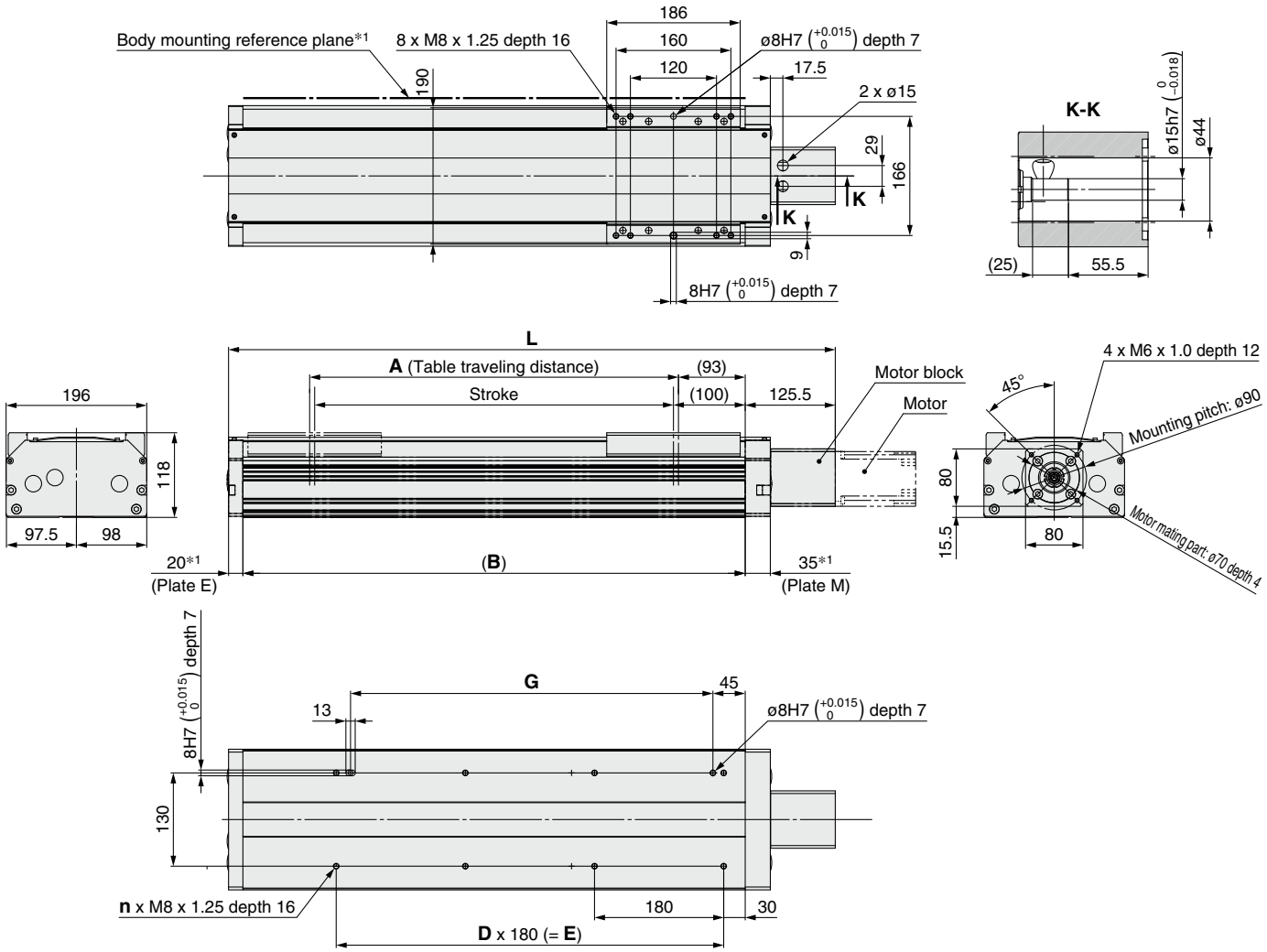

Recommended coupling

Manufacturer	Part no.
Nabeya Bi-tech Kaisha	MJT-40C-RD-15-19
Miki Pulley Co., Ltd	ALS-040-B-15B-19B
KTR Japan Co., Ltd.	ROTEX-GS19-98Sha-GS-2.5-ø15-2.5-ø19
SUNGIL Machinery Co., Ltd.	SJCB-40C-GR-15X19

*1 When mounting the actuator using the body mounting reference plane, set the height of the opposite surface or pin to be 5 mm or more. (Recommended height 6 mm)
The surfaces of plates M and E on the ends of the product may slightly protrude from the body mounting reference plane (Body/B dimension range). Be sure to provide a clearance of 1 mm or more to avoid interference.

Dimensions and Weight

Stroke	L	A	B	n	D	E	G	Weight [kg]
200	545.5	214	400	6	2	360	325	17.6
300	645.5	314	500	6	2	360	325	19.7
400	745.5	414	600	8	3	540	505	21.8
500	845.5	514	700	8	3	540	505	23.9
600	945.5	614	800	10	4	720	685	26
800	1145.5	814	1000	12	5	900	865	30.2
1000	1345.5	1014	1200	14	6	1080	1045	34.3
1200	1545.5	1214	1400	16	7	1260	1225	38.5
1500	1845.5	1514	1700	20	9	1620	1585	44.8

Side Supports

Side supports: MY-S50A

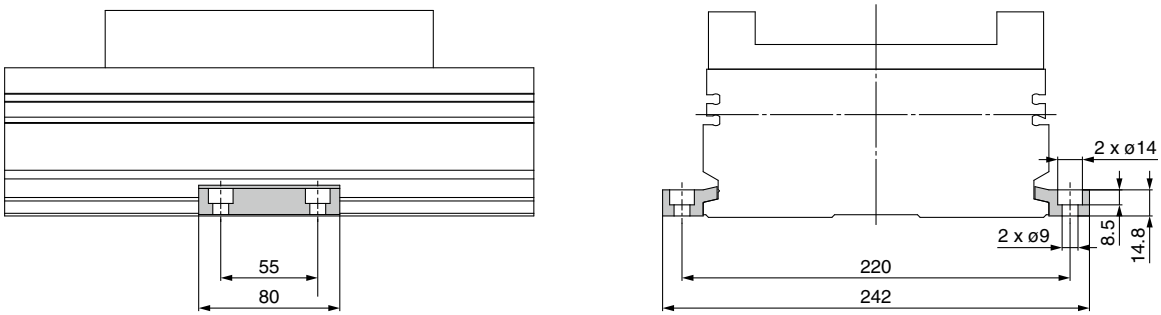

∗ The side supports consist of a set of right and left brackets.

Usage Guide for Side Supports

When mounting with the side supports, be sure to use the number of side supports (N) and the support spacing (L1) shown in the figure and table below as a guide.

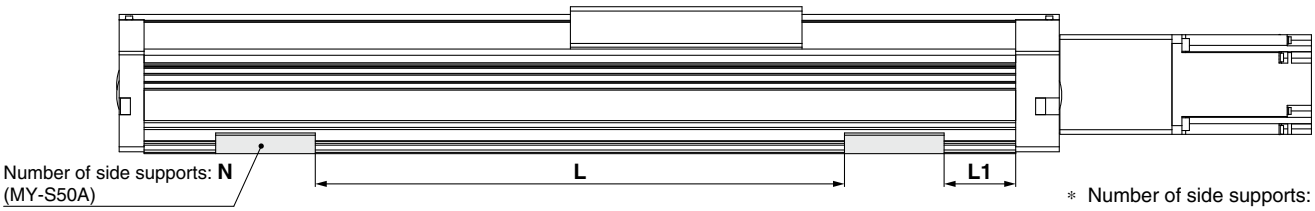

∗ Number of side supports: N is the combined number of left and right supports.

Stroke	N (Qty.)	L1 [mm]	Screw size	Max. tightening torque [N·m]
200 st	6	15	M8 x 1.25	12.5
300 st	6			
400 st	6			
500 st	6			
600 st	8			
800 st	8			
1000 st	10			
1200 st	10			
1500 st	14			

- **Secure the side supports using the support spacing (L) in the table above.**
- When mounting with the side supports, use in combination with the pin on the bottom of the body.
- For vertical or bottom mounting, please refrain from using only the side supports.

Auto Switch Mounting

When mounting an auto switch, first, hold a switch spacer between your fingers and press it into the auto switch mounting groove.
When doing this, confirm that it is set in the correct mounting orientation, or reattach it if necessary.
Next, insert an auto switch into the auto switch mounting groove and slide it until it is positioned under the switch spacer.
After establishing the mounting position, use a flathead watchmaker's screwdriver to tighten the included auto switch mounting screw.

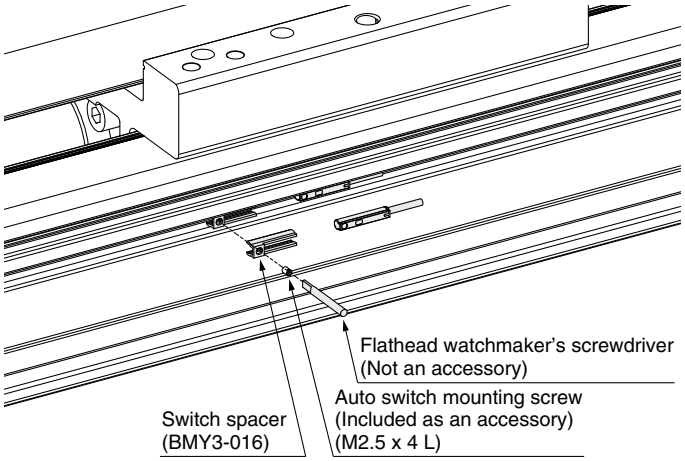

Auto Switch Mounting Screw Tightening Torque

Auto switch model	Tightening torque
D-M9□(V)	0.10 to 0.15
D-M9□W(V)	

⚠ **Safety Instructions**	Be sure to read the “Handling Precautions for SMC Products” (M-E03-3) and “Operation Manual” before use.